Noise Reduction Effects of Column-Parallel Correlated Multiple Sampling and Source-Follower Driving Current Switching for CMOS Image Sensors

Shoji Kawahito, Sungho Suh, Takuma Shirei, Shinya Itoh, Satoshi Aoyama*
Research Institute of Electronics, Shizuoka University,
e-mail:kawahito@idl.rie.shizuoka.ac.jp
*Brookman Technology Inc.

Abstract

Noise reduction effects of column-parallel correlated multiple-sampling (CMS) for CMOS image sensors are investigated. In the CMS, the gain of the noise cancelling can be flexibly changed by the sampling number. It has a similar effect to that of amplified CDS for thermal noise but is more effective for 1/f and random telegraph signal (RTS) noises. The effect has been investigated with an implementation of a 1Mpixel pinned photodiode CMOS imager. A driving current switching of pixel source followers is also tested to further reduce the RTS-like noise using the CMS.

I. Introduction

For low-noise CMOS image sensors, the reduction of pixel source follower noise, especially 1/f and RTS (random telegraph signal) noises is becoming very important. Column-parallel high-gain CDS circuits are useful for low-noise CMOS image sensors [1][2]. This high-gain amplification reduces the noise of wideband amplifiers at the output of image sensors by a factor of the gain, and if the amplifier reset noise is cancelled, the thermal noise due to the pixel source follower (SF) can be reduced by a factor of square root of the gain [3]. In this paper, noise reduction effects of another type of column-parallel high-gain signal readout circuits, correlated multiple sampling (CMS) circuits are discussed. Though a CMOS imager with integrators at the column has been reported, it is not intended for the CMS, but for pixel binning to realize variable spatial resolution [4]. In the CMS, both the reset and signal levels are sampled for multiple times, and the difference of the average of the both levels using multiple samples is calculated for pixel-related noise canceling. In the CMS, the thermal noise of the pixel SF can be reduced by a factor of square root of the sampling number. Theoretically the CMS is more effective for 1/f noise reduction than the CDS counterpart [5][6]. In this paper, the noise reduction effects of the CMS for the RTS and RTS-like noise are measured by the implementation of a 1Mpixel CMOS image sensor. The noise histogram showed an interesting behavior of the CMS operation for the noisy pixels where the RTS-like noise dominates. The noise reduction effects of the CMS depend on the spectrum of the noise. To modify the noise spectrum and to reduce the RTS-like noise more efficiently, a technique of driving current switching of the SF is tested using a prototype CMOS image sensor where the SF output with a high-gain noise cancelling amplifier can be directly monitored for performing the CMS using an external A/D converter.

II. Column Correlated Multiple Sampling Circuits

An implementation of the CMS circuit using a switched capacitor (SC) integrator is shown in Fig. 1. It works with a non-overlapping two-phase clock. As shown in Fig. 2, reset and signal levels are sampled for M times and integrated in analog memory consisting of an amplifier with a feedback capacitor. The integrator outputs for the reset and signal levels are sampled and held at capacitors, respectively. The both levels stored in the S/H circuits are horizontally scanned and the difference of the two levels is taken at a

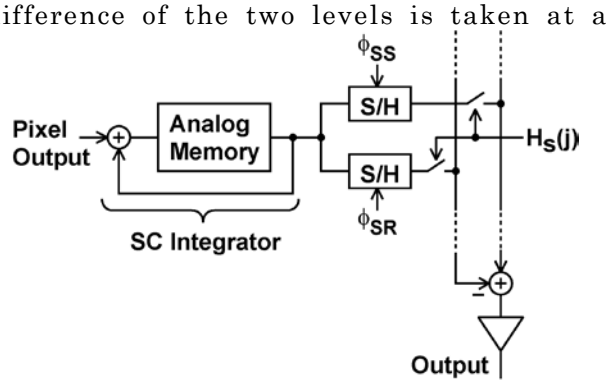

Fig. 1 Column CMS Circuit Using a SC integrator.

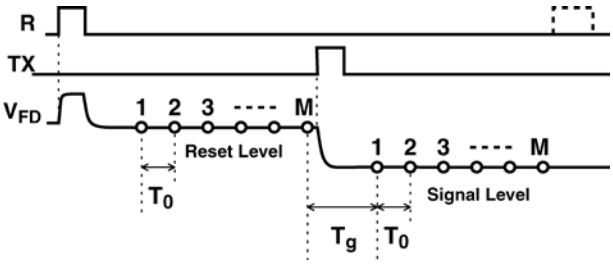

Fig. 2 Timing for Multiple Sampling.

differential charge amplifier at the output. If T_g in Fig. 2 equals to N_gT_0, where T_0 is the sampling period and N_g is an integer, the CMS can be written as

$$V_{out}(n\ _0T)=\sum_{k=0}^{M-1}\left\{V_{in}((n-k)T_0)-V_{in}((n-k-M-N_g+1)T_0)\right\} \quad (1)$$

Therefore, the transfer function of the CMS is given by

$$H(z)=\frac{(1-z^{-M})(1-z^{-M-N_g+1})}{1-z^{-1}} \quad (2)$$

where $z=\exp(j\omega T_0)$. The noise power (mean square noise voltage) after the CMS can be calculated by

$$\overline{v_{n,CMS}}^2=\int_0^\infty S_n(f)\frac{1}{1+(\omega/\omega_c)^2}\left|H(e^{j\omega T_0})\right|^2 df \quad (3)$$

if noise spectrum $S_n(f)$ of a noise source is known, where ω_c is the cut-off angular frequency of the sampling circuits in the CMS. In CDS operation, the transfer function is given by

$$H(s)=1-e^{-sT_0} \quad (4)$$

and the frequency response can be obtained with $s=j\omega$. Fig. 3 shows the noise power for 1/f noise with the CMS operation [6]. In this result, $S_n(f)=N_f/f$ and the noise power is normalized with $2N_f$, where N_f is the flicker noise coefficient.

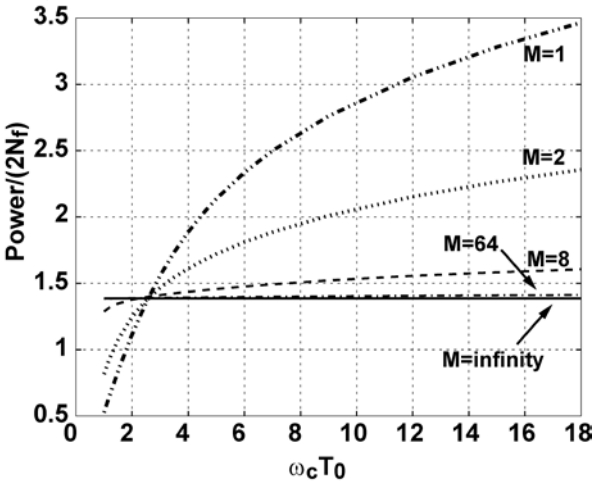

Fig. 3 1/f noise after CMS (N_g=1).

In Fig.3, M=1 corresponds to the CDS. ω_c is the inverse of the time constant τ of the sampling circuits in the CMS or CDS. Because of the slewing behavior of the pixel source follower for a large signal and sufficient settling for precise CDS operation, $\omega_cT_0=T_0/\tau$ must be chosen large enough. The response of CDS operation to 1/f noise is expressed as

$$\overline{v_{nf,CDS}}^2\cong 2N_f\left(\varepsilon+\ln(\omega_cT_0)\right) \quad (5)$$

where ε (=0.577215..) is Euler's constant[5]. If $\omega_cT_0=T_0/\tau=10$, $\overline{v_{nf,CDS}}^2/2N_f\cong 2.9$. On the other hand, $\overline{v_{n,CMS}}^2/2N_f$ for large M approaches to $\ln(4)\cong 1.39$. Therefore, the CMS has a higher noise reduction effect to 1/f noise by a factor of two in power when compared to the CDS if a large M in the CMS can be used. For calculating the noise reduction effect of RTS-like noise, the noise spectrum has to be known. RTS noise due to a single trap has Lorentzian-type spectrum which is given by

$$S_n(f)=\frac{S_{n0}}{1+(\omega\tau_a)^2} \quad (5)$$

where τ_a is given by

$$\frac{1}{\tau_a}=\frac{1}{\tau_c}+\frac{1}{\tau_e} \quad (6)$$

and where τ_c and τ_e are mean time that the trap captures and emits an electron, respectively. On the other hand, the bandwidth of the CMS, ω_{CMS} is given by

$$\omega_{CMS}=\frac{2}{T_0}\sin^{-1}\frac{\sqrt{2}}{M}\cong\frac{2}{T_0}\frac{\sqrt{2}}{M}\ \text{(for M>>1)} \quad (6)$$

The bandwidth of the CMS is inversely proportional to *M*. If ω_{CMS} is smaller than $1/\tau_a$, the band limitation effect of the CMS is effectively used for the RTS-like noise reduction.

III. Driving Current Switching for Source Followers

The noise reduction effect of the CMS to RTS-like noise depends on the spectrum of the noise. Increasing the driving current of the pixel source followers leads to the reduction of mean time that a trap captures an electron (τ_c) as shown in Fig. 4(a) [7][8], and the resulting frequency spectrum of the RTS noise is shifted to relatively

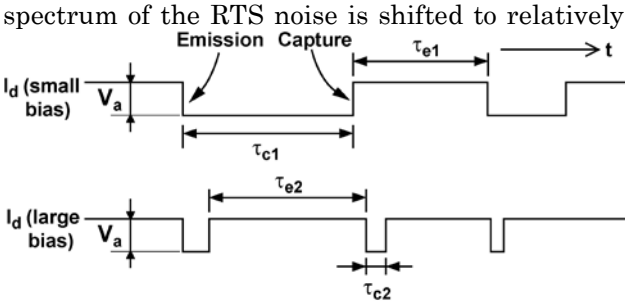

(a) Time domain

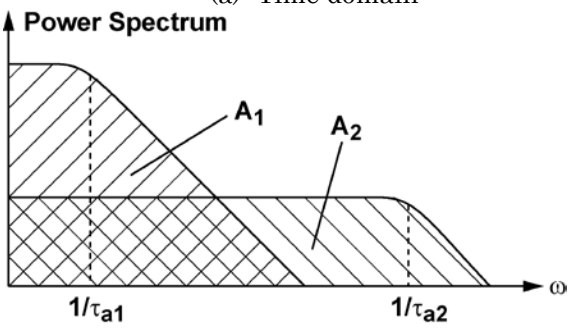

(b) Frequency domain

Fig. 4 RTS noise of SF with small and large biases.

higher frequency range(Fig. 4(b)), and the noise power also decreases. However, large SF bias current causes reduced SF dynamic range, increased non-linearity, and unnecessarily large power dissipation. Therefore, in the present paper, a technique of switched SF biasing is tested, where very large current flows into SF at only the beginning of every sampling for the CMS.

IV. Measurements

Two prototype CMOS image sensors are implemented with 0.18μm CMOS technology with pinned photodiodes. One is a 1M (1024 x 1024 pixels) CMOS image sensor with column-parallel CMS circuits for low-noise readout and the other is a CMOS image sensor with several pixel designs to test the noise reduction effect of source-follower bias current switching together with the CMS operation. Fig. 5 shows measurement results of the linearity to luminance. Though the linearity is degraded at large output swing for M=1, the gain of signal in the linear region almost exactly follows the number of samplings.

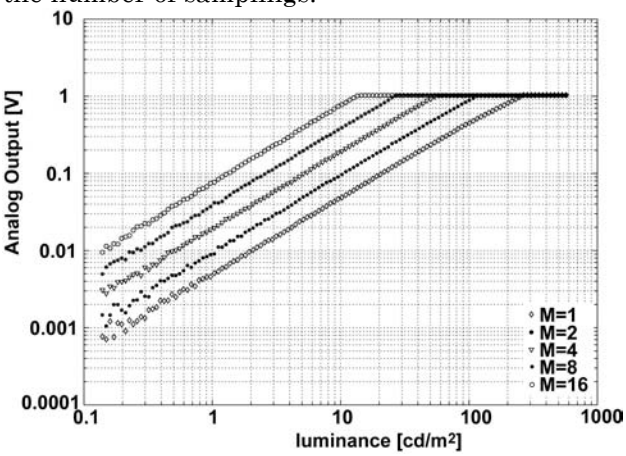

Fig. 5 Linearity of the analog output to luminance.

Fig. 6 shows dark noise histogram of the 1Mpixel CMOS image sensor. The cumulative probability as a function of noise electrons, which is obtained with the noise histogram is shown in Fig. 7. Conversion gain measured is 35μV/e- and the SF bias current switching is not used. The size of pixel amplifier transistor is W/L=1μm/1μm and depletion-mode device is used. The input-referred noise is entirely reduced by increasing the number of samplings (*M*). For *M*=16, the input-referred noise at the peak of noise histogram is 1.8 electrons. For relatively low-noise pixels where thermal noise is dominant, the noise reduction effect can be explained by a factor of *M*, and square root of *M*. It is very interesting that the CMS is also effective for reducing the noise of noisy pixels where the RTS-like noise is dominant. The noise reduction effect for the noisy pixels as a function of M has different tendency when

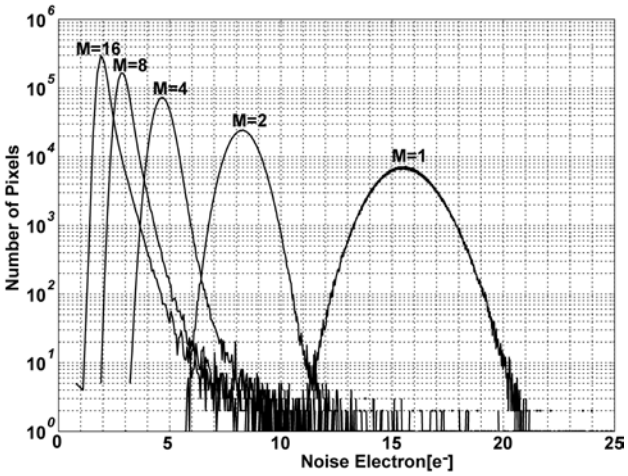

Fig. 6 Noise histogram of 1Mpixel CMOS imager.

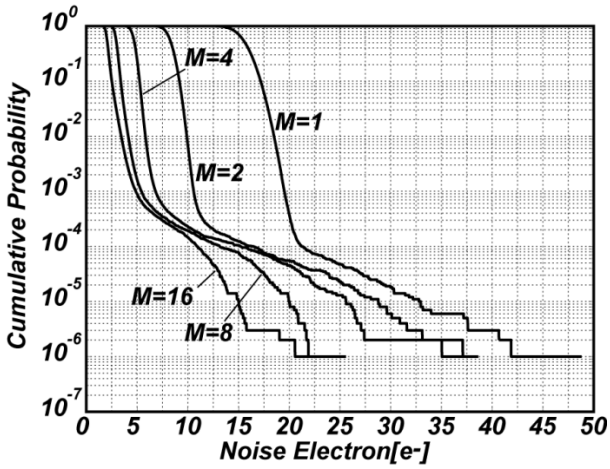

Fig. 7 Noise reduction effect of CMS circuits.

Fig. 8 Sample image (1M pixels) at low light level measured with a 1Mpixel CMOS imager (F=1.4, 4300K with IR cut filter, 10fps, 0.03lx).

compared with the case for lower-noise pixels.

Fig. 8 is a sample image taken at low

illumination level of 0.03lx at object. The accumulation time is 100ms that is full-frame period at 10 fps. The pixel size is 7.5μm square. The number of samplings in the CMS is set to 8. This shows the low-noise CMOS image sensor with CMS circuits is suitable for very low light level imaging.

Fig. 9(a) and (b) are measurement results showing the effect of the SF bias current switching. The r.m.s. noises of 1600 pixels of different SF input transistor sizes are measured and the results for W/L=1.2μm/1.2μm and 0.9μm/0.5μm are shown in Fig. 9. The prototype CMOS image sensor has a column-parallel preamplifier (gain =22). The preamplifier output are multiplexed to read out and to sample with an external A/D converter. The number of samplings for reset and signal levels for the CMS operation is 32. The switching is effective for relatively large size transistor, but is not so for smaller size transistor.

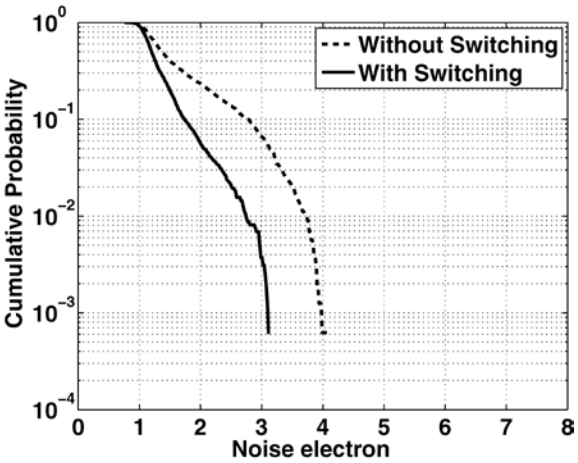

(a)W/L=1.2μm/1.2μm

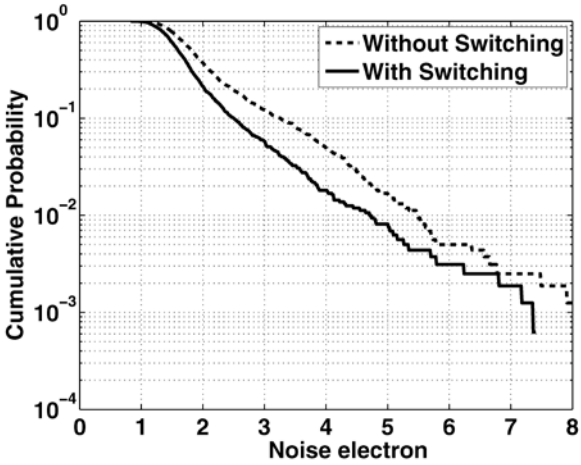

(b) W/L = 0.9μm /0.5μm

Fig. 9 Noise reduction effect of SF bias current switching and CMS.

Conclusions

Noise reduction effects of column-parallel correlated multiple sampling are investigated with implemented CMOS imager prototypes. The CMS effectively reduces the noise of noisy pixels due to RTS-like noise. The driving current switching of the source follower has not drastic but not marginal effect of RTS-like noise reduction.

Acknowledgments

This work was supported by the Ministry of Education, Culture, Sports, Science and Technology under Grant-in-Aid for Scientific Research (A), No. 19206040, and the "Knowledge Cluster Initiative".

References

[1] S. Kawahito, M.Sakakibara, D.Hondoko, N. Nakamura, M. Higashi, K. Mabuchi, H. Sumi, "A Column-Based Pixel-Gain-Adaptive CMOS Image Sensor for Low-Light-Level Imaging", Dig. Tech. Papers, ISSCC, pp. 224-225, Feb. 2003.

[2] A. Krymski, N. Khaliullin, H. Rhodes, " A 2e noise 1.3Megapixel CMOS sensor," Proc. IEEE workshop CCD and Advanced Image Sensors, Elmau, Germany, June 2003.

[3] N. Kawai, S. Kawahito,"Noise analysis of high-gain low-noise column readout circuits for CMOS image sensors", IEEE Trans. Electron Devices, vol.51, no.2, pp.185-194, 2004.

[4] Z. Zhou, B. Pain, E. Fossum," A CMOS imager with on-chip variable resolution for light-adaptive imaging, " Dig. Tech Papers, ISSCC, pp. 174-175, 1998.

[5] G. R. Hopkinson, D. H. Lumb, " Noise reduction techniques for CCD image sensors, " J. Phys. E: Sci. Instrum., vol. 15, pp. 1215-1223, 1982.

[6] N. Kawai, S. Kawahito, "Effectiveness of a correlated multiple sampling differential averager for 1/f noise, IEICE Express Lett.", vol. 2, no. 13, pp.379-383, 2005.

[7] Z. Shi, J. P. Mieville, M. Dutoit, "Random Telegraph Signals in Deep Submicron n-MOSFETs, " IEEE Trans. Electron Devices, vol. 41, no. 7, pp. 1161-1168, 1994.

[8] K. Abe, S. Sugawa, R. Kuroda, S. Watabe, N. Miyamoto, A. Teramoto, T. Ohmi, Y. Kamata and K. Shibusawa, "Analysis of Source Follower Random Telegraph Signal Using nMOS and pMOS Array TEG", Prof. Int. Image Sensor Workshop, pp. 62-65, Ogunquit, 2007.