A TOF range image sensor with an ambient light charge drain and small duty-cycle light pulse

Tomonari Sawada [1], Shoji Kawahito [1], Masakatsu Nakayama [1], Kana Ito [1], Izhal Abdul Halin [1], Mitsuru Homma [2], Takeo Ushinaga [2] and Yasunari Maeda [3]

[1]Shizuoka University, 3–5–1, Johoku, Hamamatsu, Shizuoka, 432–8011 JAPAN
[2] Sharp Corporation, Tenri, Nara, JAPAN
[3] Suzuki Motor Corporation, Hamamatsu, Shizuoka, JAPAN

***Abstract*— This paper presents a TOF range image sensor with an ambient light charge drain and small duty-cycle light pulse. Under the same optical energy consumption of light source, the charge drain and small duty-cycle for the gate control pulse more effectively reduce the influence of ambient light than that of using a 50% duty pulse or a sinusoidal modulation. The effect of the ambient light charge drain is analyed and confirmed with an experiment. A prototype CMOS range image sensor with the spatial resolution of 336×252 pixels and the pixel size of 15×15μm^2 is implemented in a 0.35μm 2-ploy 3-metal standard CMOS process The range resolution of 5.0mm is achieved with a light pulse width of 25ns at 30frames/s.**

***Index Terms*— Time-of-Flight, TOF, range image sensor, ambient light charge drain**

I. Introduction

3-D imaging systems can be used in a variety of applications such as automobile, robot vision systems, security and so on. Many kinds of range finding methods have been proposed for 3-D measurements. TOF range imaging is one of 3-D image capture methods. The range L is determined by sensing the roundtrip time of flight of light and is given by $L = cT_d/2$, where $c = 3\times10^8$ m/sec is the speed of light and T_d is the roundtrip time of flight of light. Recently, many TOF range image sensors have been reported [1], [2], [3], [4]. A method of the TOF range imaging uses a sinusoidal modulated light pulse [1]. In this method, the pixel driving frequency must be increased for achieving higher range resolution. This method uses a range calculation method with reduced influence of ambient light. However, there is no effect for reducing the ambient light charge itself. This paper presents a TOF range image sensor with an ambient light charge drain and small duty-cycle light pulse. A small duty-cycle light pulse is effective for increasing the range resolution without increasing the pixel operation frequency, while suppressing the influence of ambient light by draining the ambient light charge during the off-state of the LED.

II. Sensor Design

A. Pixel structure

Fig.1 shows the pixel layout and the cross-sectional views of x-x' and y-y' directions. A pixel structure of the sensor employs single layer polysilicon gates on relatively thick oxide. Using these single layer polysilicon gates, the sensor achieves high-speed charge transfer like a CCD which is essential for TOF range imaging and can divide signal charge into two floating diffusions (FD) depending on delay time (x-x' direction). In the photodetector region of the pixel, high-speed photo response is achieved by using a lightly-doped p-epitaxial layer on a highly doped p-type substrate. A single additional mask only is used to create an n-type buried layer which prevents the Si-SiO_2 interface traps from causing charge transfer delay. A pixel structure of the sensor has a function of ambient light induced charge reduction (y-y' direction). Compared with our previous design [5], the potential profile near the n^+ drain region is changed and size of TX_{CD} gate is enlarged to improve performance of the ambient light charge draining. The potential peak point of the n-type buried layer is changed to deeper side in the substrate for reducing the effect of Si-SiO_2 interface traps.

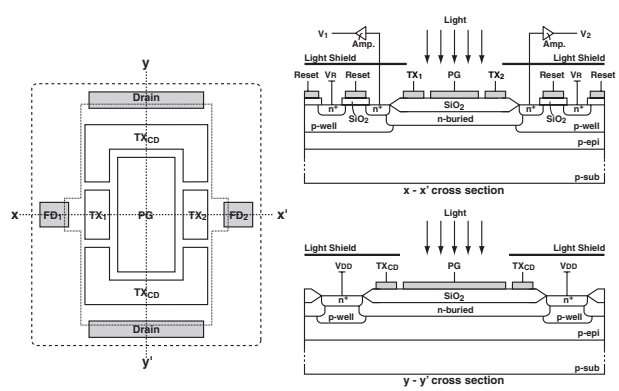

Fig. 1. Pixel layout

B. Timing diagram

Fig.2 shows the timing diagram of the pixel with a small duty-ratio light pulse. The duty-ratio R_D is defined as $R_D = T_P/T_C$, where T_P is the gate pulse width and T_C is the cycle. Using TX_1, TX_2 and TX_{CD} gates, charge in phases A and B due to mostly signal light pulse is transferred to two FD nodes and charge in phase C due to mostly ambient light

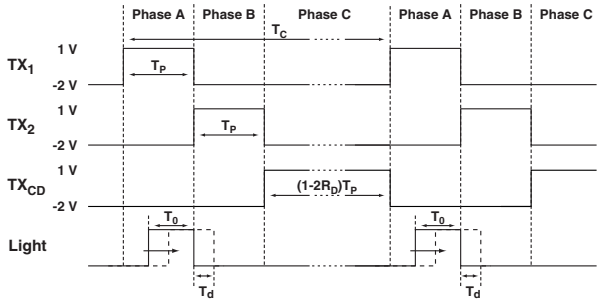

Fig. 2. Timing

is drained. The difference of the amount of charge between the two FD nodes reflects the time-of-light of light pulse. The operation in phase C is for ambient light charge drain. Under the same optical energy consumption of light source, the operation in phase C in this structure more effectively reduces the influence of ambient light than that of using a 50% duty pulse or a sinusoidal modulation. Furthermore, the instantaneous power of the LED can be increased to a value higher than the maximum ratings of the DC operation of the LED if a small duty-cycle pulse is used. This leads to an economical use of the LED.

III. Influence of Ambient Light to Range Resolution

A. Range Estimation

Fig.3 shows the pixel potential profile. The charges generated in phases A, B and C are transferred to FD_1, FD_2, and drains, respectively. The same procedure is repeated for M times during accumulation time, then the TOF pixel output voltages V_{OUT1} and V_{OUT2} are given by

$$V_{OUT1} = V_1 + V_{A1} = \frac{M I_{ph}(T_0 - T_d)}{C_1} + V_{A1} \tag{1}$$

and

$$V_{OUT2} = V_2 + V_{A2} = \frac{M I_{ph} T_d}{C_2} + V_{A2} \tag{2}$$

where I_{ph} is the photocurrent induced by the received light pulse, T_0 is the light pulse width, V_{A1} and V_{A2} are the voltages of ambient light components in phases A and B, and C_1 and C_2 are the capacitances of FD_1 and FD_2, respectively. The ambient light components are obtained by mearsuring V_{OUT1} and V_{OUT2} without the signal light pulse. From Eq.(1) and Eq.(2), T_d is given by

$$\begin{aligned} T_d &= \frac{V_{OUT2} - V_{A2}}{V_{OUT1} - V_{A1} + V_{OUT2} - V_{A2}} T_0 \\ &= \frac{V_2}{V_1 + V_2} T_0 \end{aligned} \tag{3}$$

, if $C_1 = C_2$. The range from the sensor to the object, L, is given by

$$L = \frac{1}{2} c T_d = \frac{1}{2} c \frac{V_2}{V_1 + V_2} T_0 \tag{4}$$

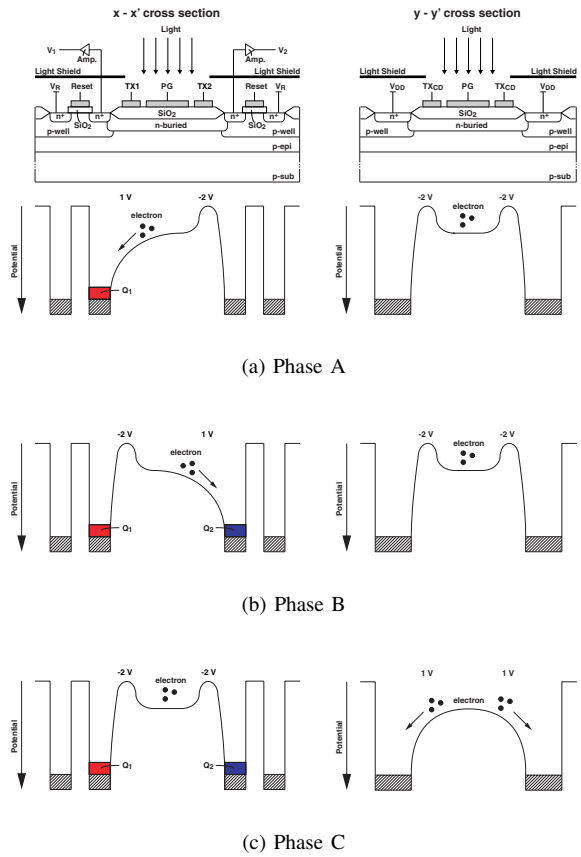

(a) Phase A

(b) Phase B

(c) Phase C

Fig. 3. Pixel Cross Sections and Potencial profiles

B. Range Resolution order Ambient illumination

Range resolution could be estimated by considering the variance of Eq.(4) which is written as

$$\begin{aligned} \sigma_L^2 = &\left(\frac{\partial L}{\partial V_2}\right)^2 \sigma_{V_2}^2 + \left(\frac{\partial L}{\partial V_{12}}\right)^2 \sigma_{V_{12}}^2 \\ &+2\left(\frac{\partial L}{\partial V_2}\right)\left(\frac{\partial L}{\partial V_{12}}\right)\sigma_{V_2 V_{12}} \end{aligned} \tag{5}$$

where V_{12} is the sum of V_1 and V_2, $\sigma_{V_2}^2$ and $\sigma_{V_{12}}^2$ are the variance of V_2 and V_{12}, respectively. The covariance $\sigma_{V_2 V_{12}}$ equals to $\sigma_{V_2}^2$, since V_1 and V_2 are not correlated. From Eq.(4) and Eq.(5), the range resolution is given by

$$\sigma_L^2 = \left(\frac{cT_0}{2}\right)^2 \left(\frac{\overline{V_2}}{\overline{V_{12}}}\right)^2 \left\{ \frac{\overline{V_{12}} - 2\overline{V_2}}{\overline{V_{12}}} \left(\frac{\sigma_{V_2}}{\overline{V_2}}\right)^2 + \left(\frac{\sigma_{V_{12}}}{\overline{V_{12}}}\right)^2 \right\} \tag{6}$$

Noise sources such as fixed pattern noise (FPN), thermal noise, dark current and photon shot noise (PSN) degrades range resolution. The PSN caused by ambient light illumination is unavoidably added during signal accumulation and remain in the signal components even if ambient light cancellation is done. Circuit readout noise, N_R from the output source follower, column FPN canceling circuits and output buffer amplifiers are also superimposed on the signal. This noise component is doubled to take the doubling effect of readout

noise power into account if two neighboring frame readouts are taken for subtracting ambient light generated electrons. Ambient light generated electrons or simply ambient noise, N_A is constant. The electrons which are not transfered to drain in phase C is given by $(1-R_A)(1-2R_D)N_A$, where R_A is the ratio of ambient light charge drained and that transferred to FD_1 at the next phase A. By considering these noise sources and their amounts, $\sigma_{V_2}^2/\overline{V_2}^2$ and $\sigma_{V_{12}}^2/\overline{V_{12}}^2$ are given by

$$\left(\frac{\sigma_{V_2}}{\overline{V_2}}\right)^2 = \left(\frac{\sigma_{N_2}}{\overline{N_2}}\right)^2 = \frac{\overline{N_2} + K_C\left(R_D\overline{N_A} + \overline{N_R}^2\right)}{\overline{N_2}^2} \tag{7}$$

and

$$\left(\frac{\sigma_{V_{12}}}{\overline{V_{12}}}\right)^2 = \left(\frac{\sigma_{N_{12}}}{\overline{N_{12}}}\right)^2 = \frac{\overline{N_{12}} + K_C\left[\{2R_D + (1-R_A)(1-2R_D)\}\overline{N_A} + 2\overline{N_R}^2\right]}{\overline{N_{12}}^2} \tag{8}$$

respectively, where N_1, and N_2 are the numbers of electorons in FD_1, and FD_2, respectively, N_{12}=N_1+N_2, and K_C is a factor of the noise increase due to ambient light canceling. If ambient light canceling is used, K_C=2, and otherwise K_C=1. By substituting Eq.(7) and Eq.(8) into Eq.(5), the standard deviation of range, or range resolution is expressed as

$$\sigma_L = \frac{1}{2}cT_0\left(\frac{1}{\overline{N_{12}}}\right)^2 \sqrt{\frac{\overline{N_{12}}^2(\overline{N_2} + K_C R_D\overline{N_A} + K_C\overline{N_R}^2) + \overline{N_2}^2\left[\overline{N_{12}} + \{2R_D + (1-R_A)(1-2R_D)\}K_C\overline{N_A} + 2K_C\overline{N_R}^2\right] - 2\overline{N_2}\,\overline{N_{12}}(\overline{N_2} + K_C R_D\overline{N_A} + K_C\overline{N_R}^2)}} \tag{9}$$

For the worst case where $\overline{N_2} = \overline{N_{12}}/2$, Eq.(9) reduces to

$$\sigma_L = \frac{1}{4}cT_0\frac{1}{\sqrt{\overline{N_{12}}}}\times \left(\sqrt{1 + \frac{\{2R_D + (1-R_A)(1-2R_D)\}K_C\overline{N_A} + 2K_C\overline{N_R}^2}{\overline{N_{12}}}}\right) \tag{10}$$

If N_A is small, the range resolution depends mainly on the light pulse width and the number of accumulated signal electrons, and is simplified to

$$\sigma_L \simeq \frac{1}{4}cT_0\frac{1}{\sqrt{\overline{N_{12}}}}\sqrt{1 + K_C\frac{2\overline{N_R}^2}{\overline{N_{12}}}} \tag{11}$$

IV. Measurement Results

A prototype CMOS range image sensor with the spatial resolution of 336×252 pixels and the pixel size of 15×15μm^2 is implemented in a 0.35μm 2-ploy 3-metal standard CMOS process and tested using an array of near-infrared LEDs with the wavelength of 870nm.

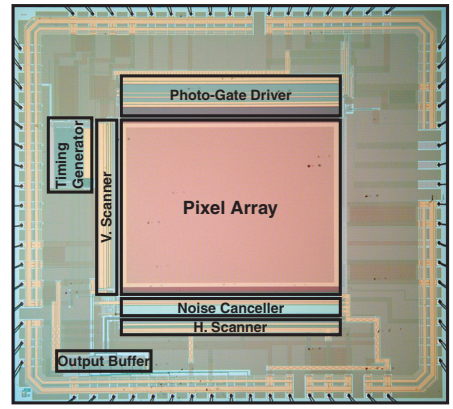

Fig. 4. Photomicrograph of the prototype sensor chip

A. Sensitivity to the Delay time T_d

Fig.5 shows the pixel outputs of V_1 and V_2, the difference $V_1 - V_2$, and the sum $V_1 + V_2$, as a function of delay time T_d. The difference of the two sensor outputs varies linearly with respect to T_d, but the sum $V_1 + V_2$, is almost unchanged in phase A and B. In phase C, the outputs of V_1 and V_2 are reduced, showing the effectiveness of ambient light charge draining.

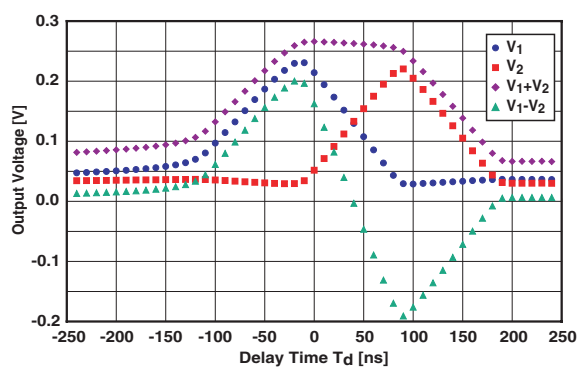

Fig. 5. Pixel Outputs versus the Delay Time T_d

B. Efficiency for Ambient light charge draining

To measurement the efficiency for ambient light charge draining, the TOF sensor is illuminated by an array of near-infrared LEDs with the wavelength of 870nm as a DC source of ambient light. In the total ambient light electorons of N_A, $R_A(1-2R_D)N_A$ is drained, the residual electorns are transferred to FD_1. Therefore, the output voltages are given by

$$V_{A1} = G_C\{(1-R_A)(1-2R_D)N_A + R_D N_A\} \tag{12}$$

$$V_{A2} = G_C R_D N_A \tag{13}$$

where G_C is the conversion gain of pixel. From Eq.(12) and Eq.(13), R_A is expressed as

$$R_A = 1 - \frac{V_{A1} - V_{A2}}{(1-2R_D)V_{A2}} \tag{14}$$

In the implemented TOF sensor, R_A is measured to be 89.7%.

C. Range Resolutiion

Figs.6 and 7 show the results of range resolution versus signal intensity under no ambient light. The light pulse delay was set such that V_1 equals to V_2 in order to measure the worst case resolution. The solid line is the calculated values using Eq.(11) where N_R is 75 electrons. The minimum range resolution at 30frames/sec and the light pulse width of 25ns is 5.0mm. The range resolution is improved by a factor of $\sqrt{N}$ for averaging of Ntimes. The resolution at 3frames/sec, which corresponds to the averaging of 10times is 1.7mm.

Fig.8 shows the result of range resolution versus signal intensity measured at 30frames/sec. In the curve measured under ambient light, ambient light canceling is carried out. The ambient light components are measured without signal light, and averaged 100 times to reduce the noise. The solid line are the calculated values using Eq.(10) and Eq.(11). The light pulse delay is set to measure the worst case resolution. The range resolution at high signal intensity approximates to the range resolution under no ambient light. The range resolution at low signal intensity is deteriorated by the influence of ambient light.

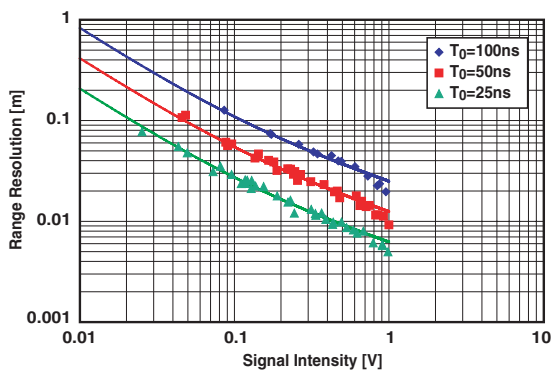

Fig. 6. Range Resolution (30frames/sec)

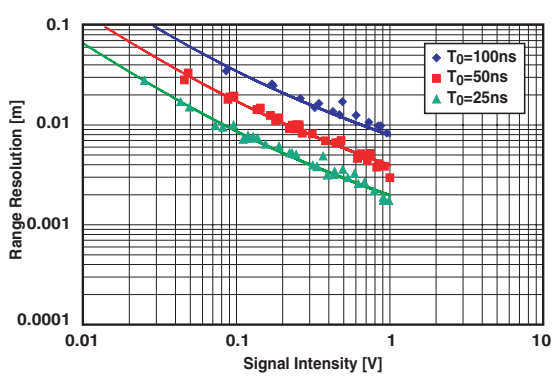

Fig. 7. Range Resolution (3frames/sec)

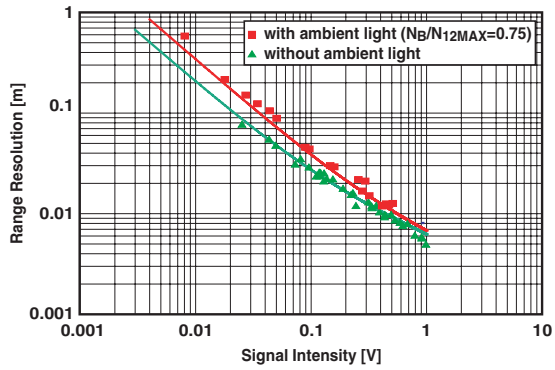

Fig. 8. Range Resolution with Ambient Light for T_0=25ns (30frames/sec)

V. Conclusion

In this paper, the design, analysis of the influence of ambient light to range resolution and implementation of a TOF range image sensor with an ambient light charge drain and small duty-cycle light pulse have been presented. The theoretical model of the range resolution under the influence of ambient light relativery well agrees with the experimental results.

Acknowledgment

This work was performed by a collaborative project between Shizuoka University, Sharp Corporation and Suzuki Motor Corporation under the support of the Knowledge Cluster Initiative of Ministry of Education, Culture, Sports, Science and Technology, and the 21st Century COE Program on ”Nanovision Science”. The authors wish to thank Dr. T. Watanabe and Mr. K. Nagase for helpful discussions.

References

[1] B. Büttgen, et al., ”High-Speed and High-Sensitive Demodulation Pixel for 3D-Imaging”, SPIE Proceedings of the SPIE, pp. 22-33, 2006

[2] R. Miyagawa, et al., “CCD-Based Range-Finding Sensor”, IEEE Trans. ED, 1997

[3] D. Stoppa et al., “A 50x30-pixel CMOS Sensor for TOF-based Real Time 3D Imaging”, IEEE Workshop CCD&AIS, pp.230–233, 2005

[4] C. Niclass et al., “A Single Photon Detector Array with 64x64 Resolution and Millimetric Depth Accuracy for 3D Imaging”, IEEE ISSCC, pp.364–365, 2005.

[5] I. Abdul Halin, et al., “A CMOS Time-of-Flight Range Image Sensor with Gates on Field Structure”, IEEE Sensors, pp.141–144, 2005.