A 240x180 120dB 10mW 12us-latency sparse output vision sensor for mobile applications

Raphael Berner, Christian Brandli, Minhao Yang, Shih-Chii Liu and **Tobi Delbruck**

Inst. of Neuroinformatics,

University of Zurich and ETH Zurich, Switzerland

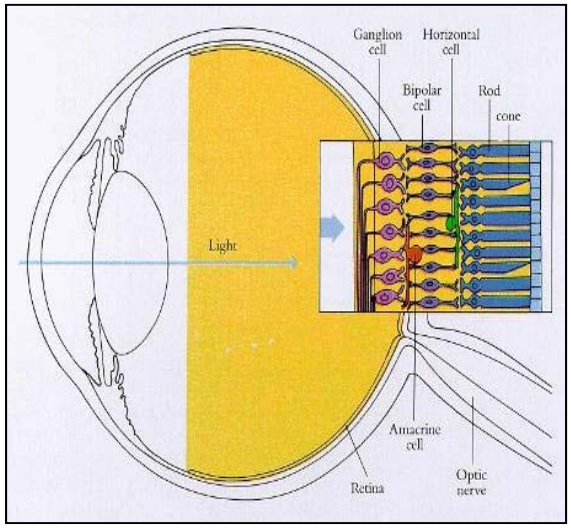

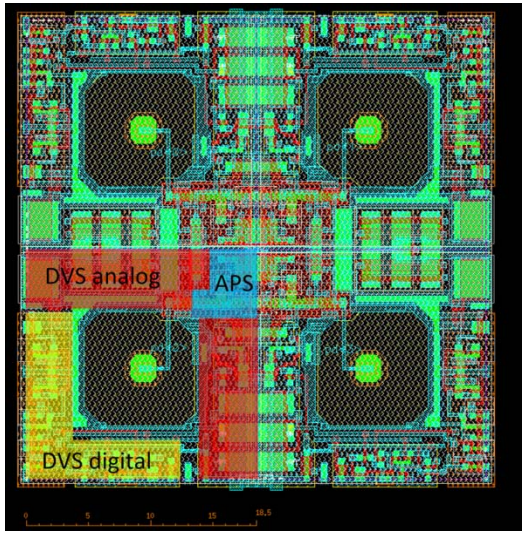

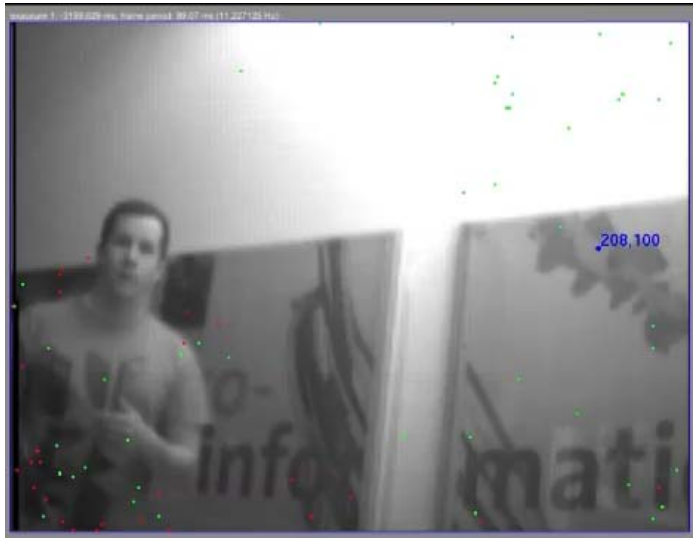

Machine Vision for Mobile Applications

- ENERGY matters because it is limited
- LATENCY is crucial for real time interaction

With conventional imager

- Low frame rate: low energy / high latency
- High frame rate: low latency / high energy

Most of the time and energy spent on redundant information in and between frames

WE NEED SMARTER WAYS OF SENSING & PROCESSING

Simplified Dynamic Vision Sensor (**DVS**) pixel architecture

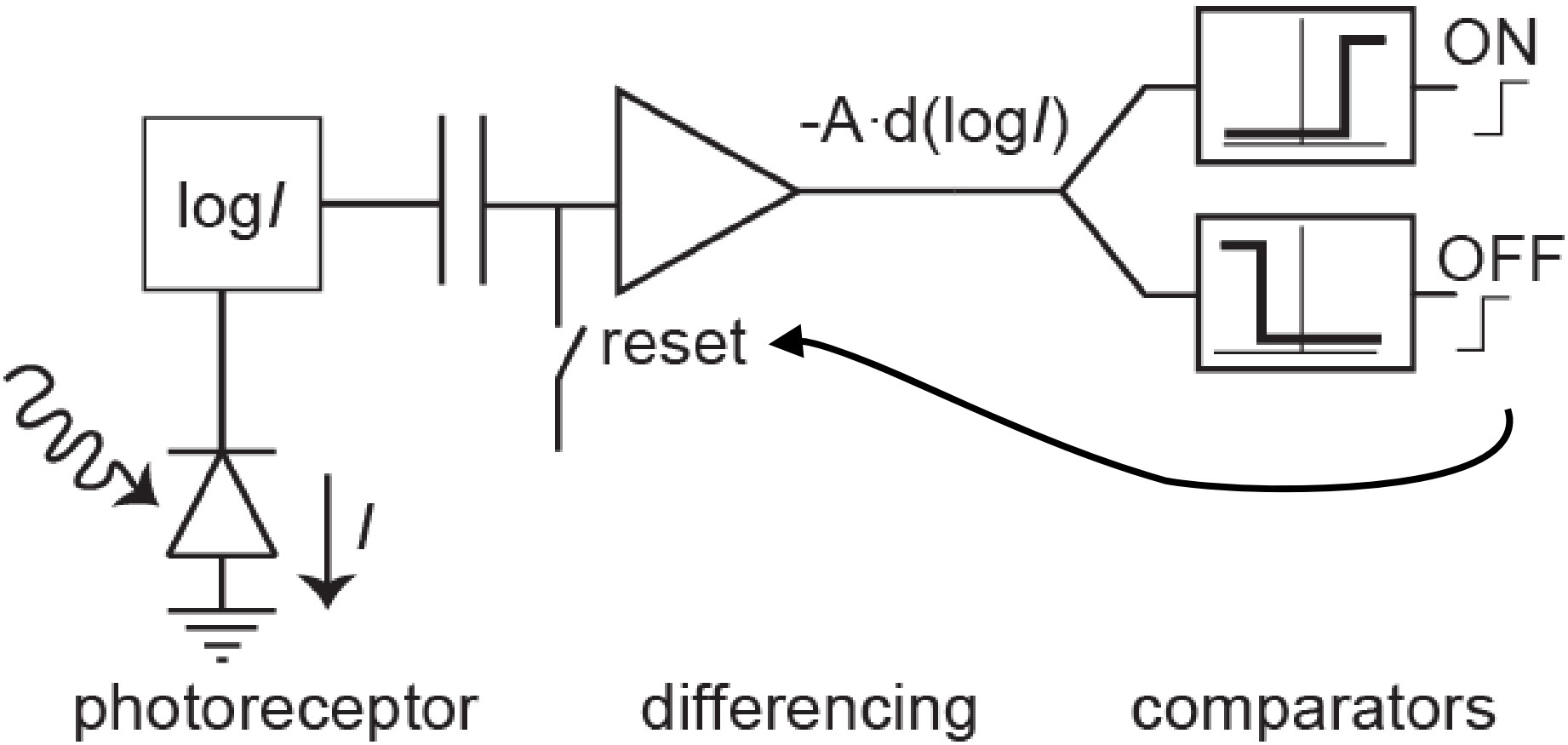

Lichtsteiner et al. JSSC 2009

Example DVS application - RoboGoalie

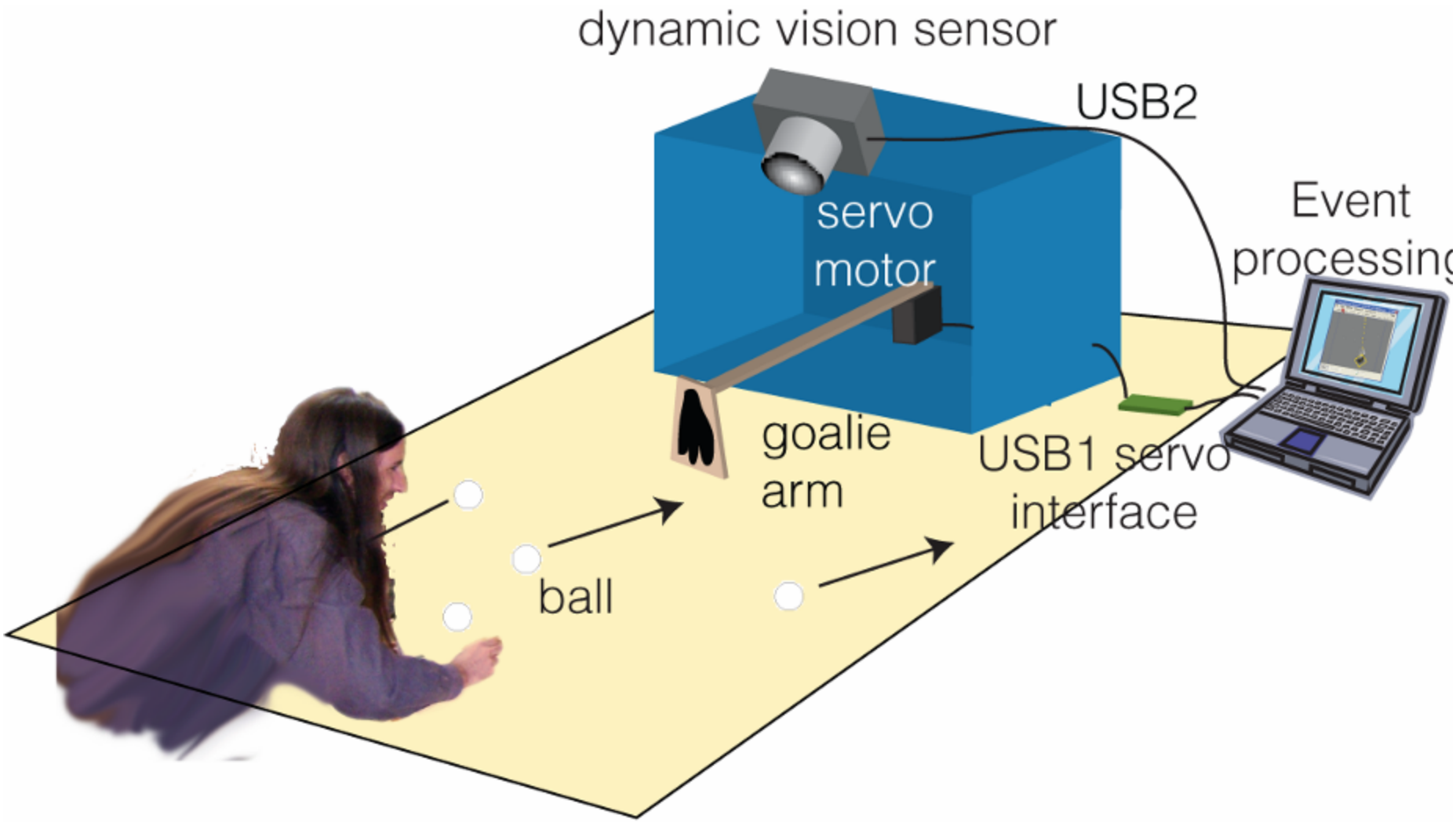

Example DVS application – RoboGoalie

Achieves 550Hz update rate at 4% laptop CPU load

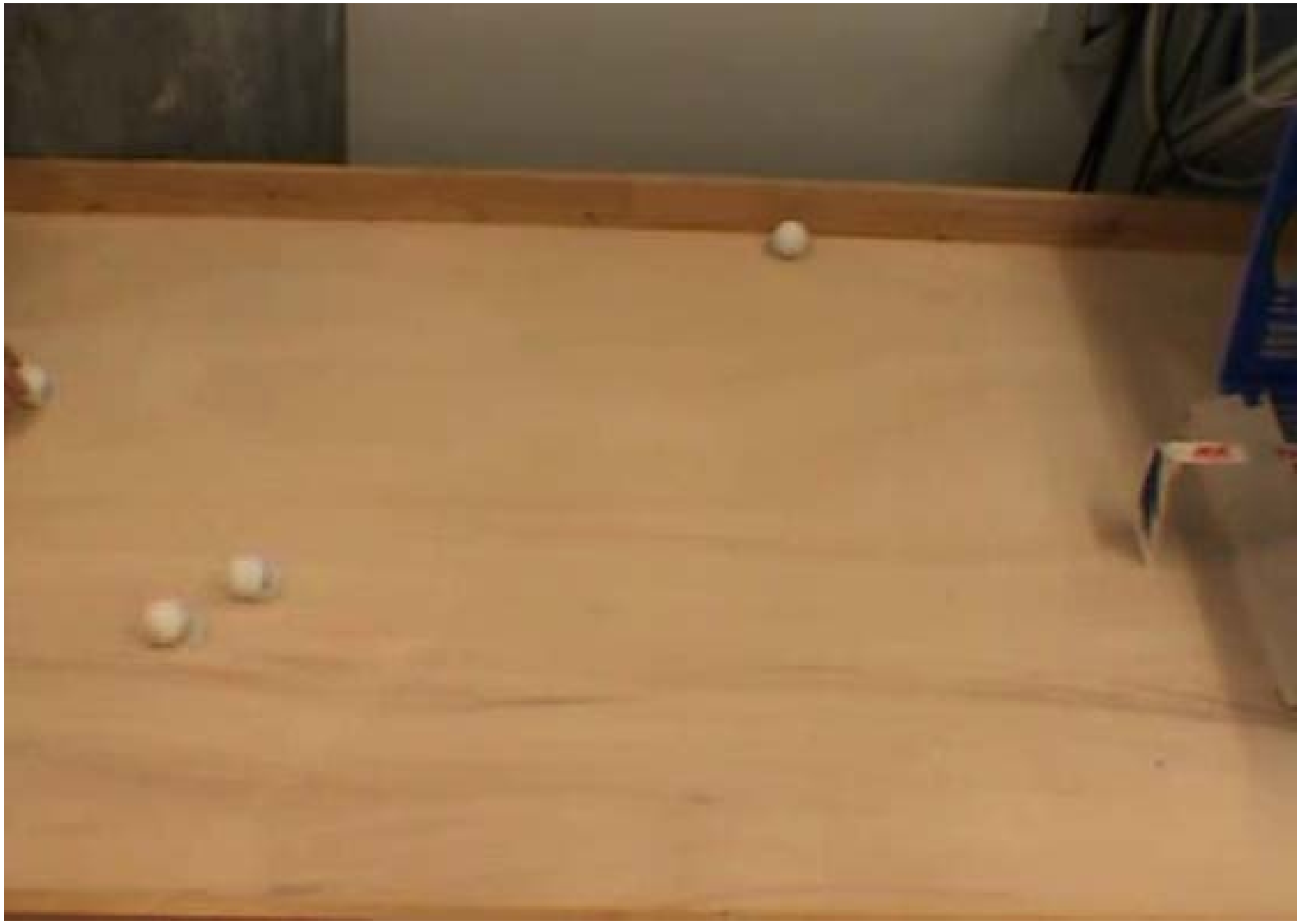

Delbruck et al., 2009

The apsDVS chip adds an intensity readout to the DVS

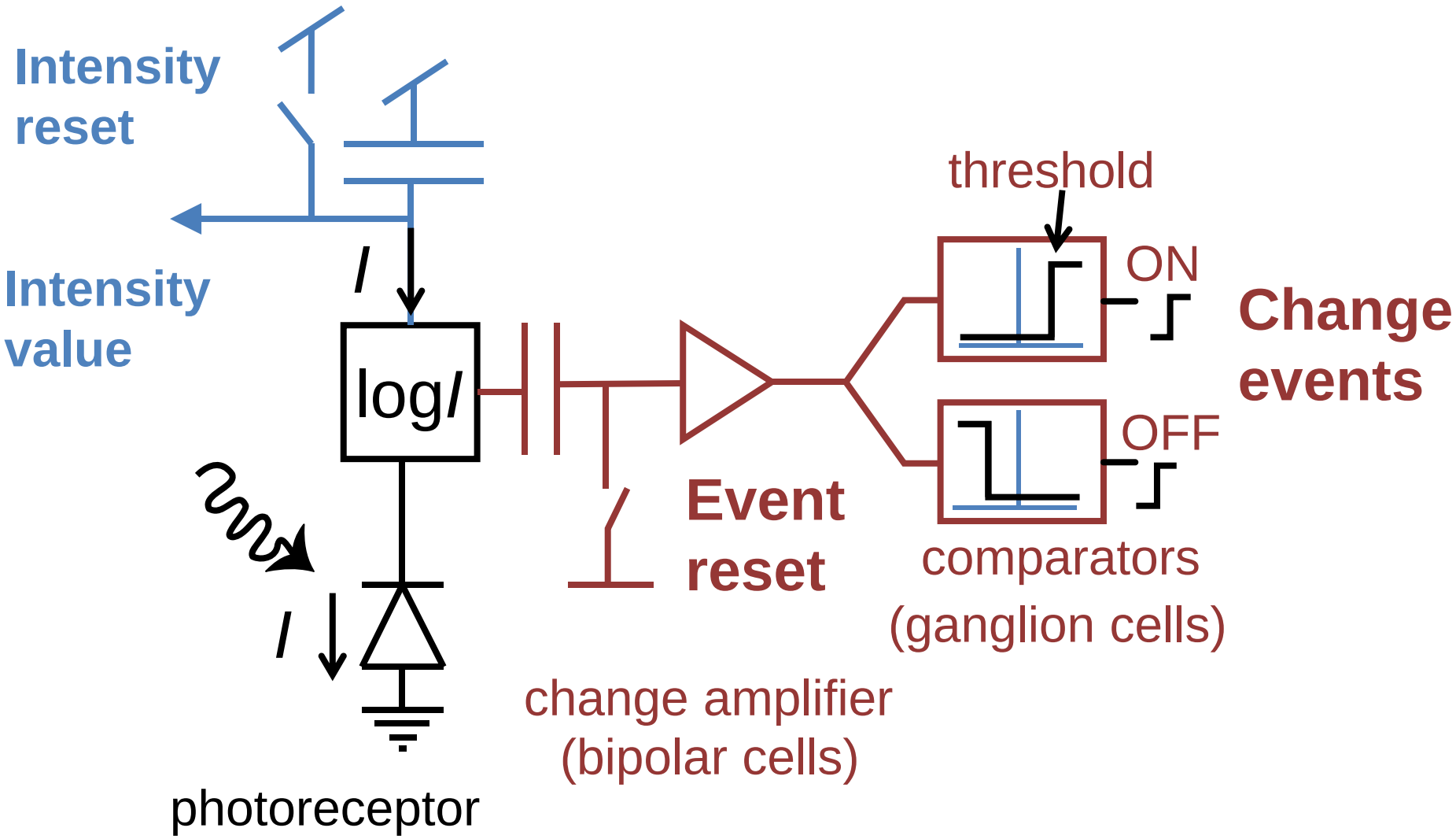

apsDVS pixel

(aps=Active Pixel Sensor)

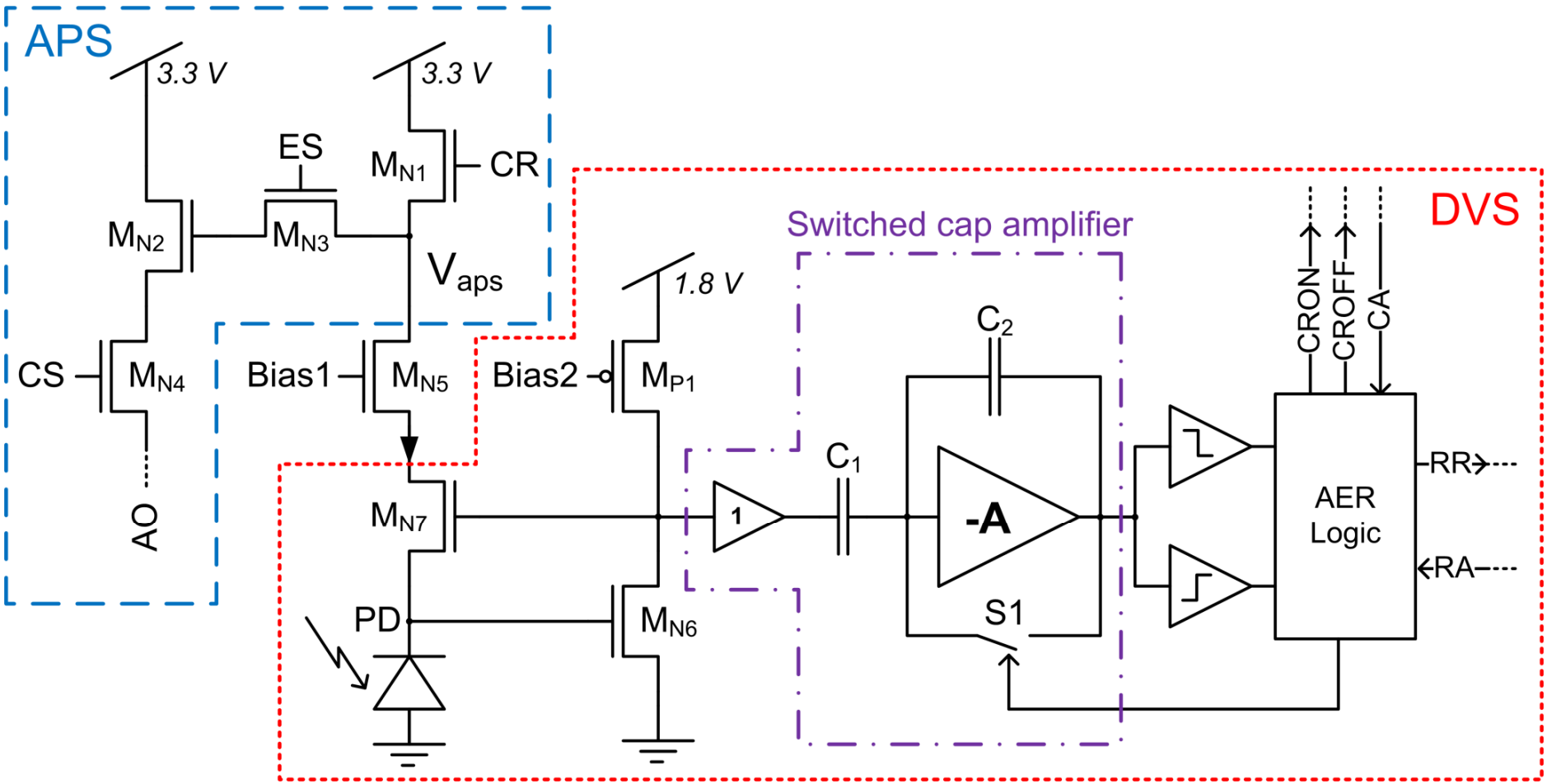

The apsDVS chip SBRET10

- 0.18um 1P6M CMOS
- MiM capacitors
- 240x180 pixels
- 22% fill factor
- 12mW power

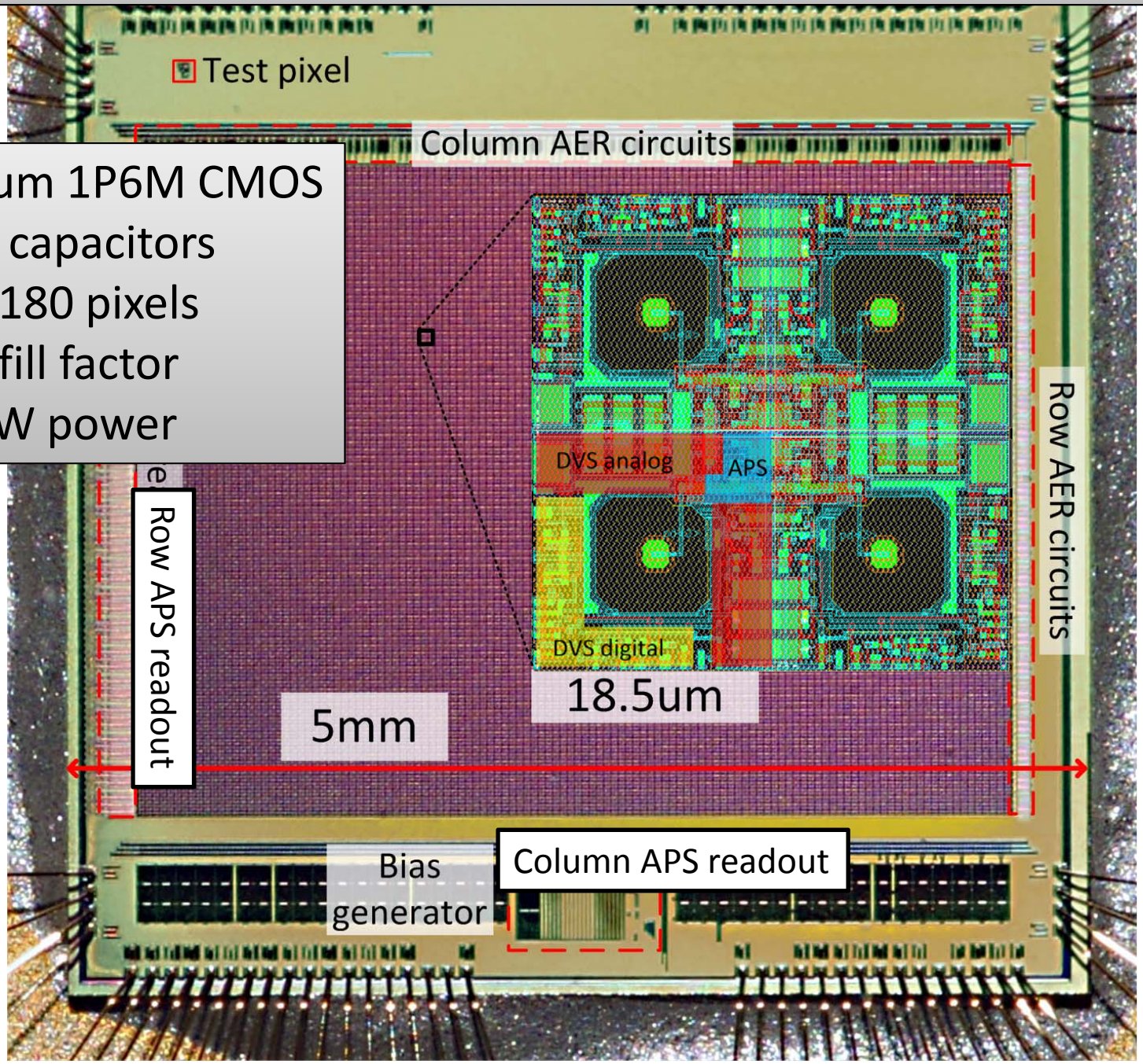

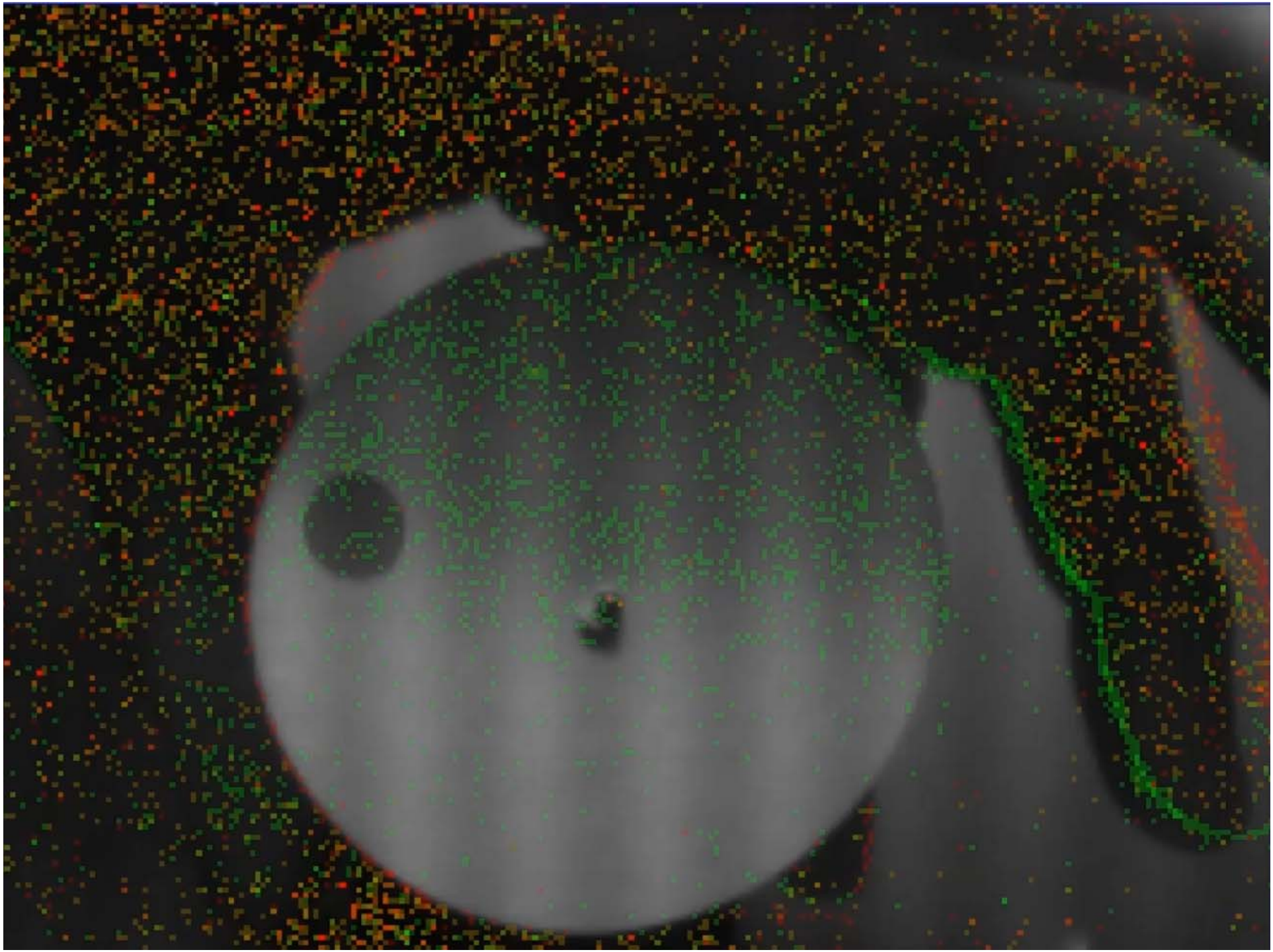


Frame: 2531; Exposure 9.09 ms; Frame rate: 1.32 Hz

The apsDVS can enhance machine vision in several ways

- Low APS frame rate → Low power
- DVS output → Low latency, sparse data

Combined advantages:

1. DVS delivers motion features for free
2. Continuous tracking solves correspondence problem
3. DVS can be used to control frame rate or ROI

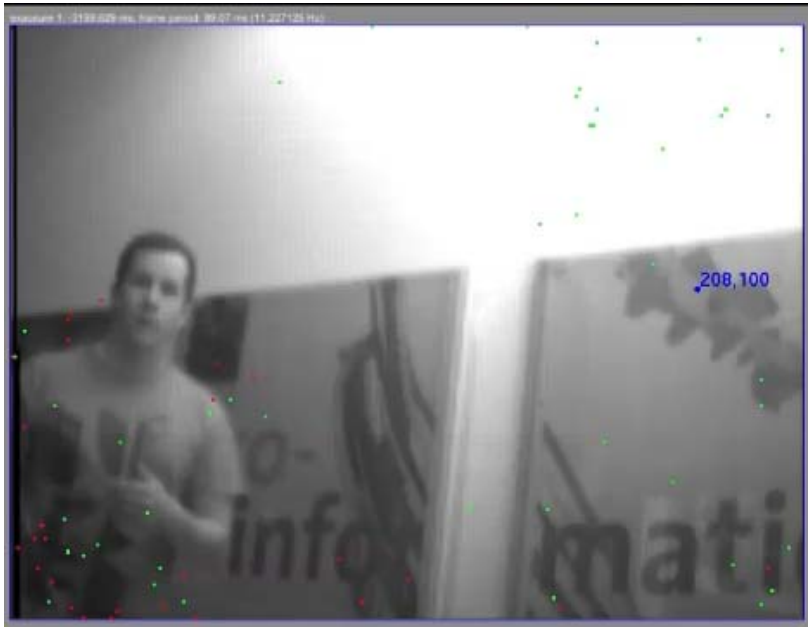

The apsDVS in Comparison

	This work (apsDVS)	ATIS (Posch et al.)
Intensity readout	APS	Time domain
Image Dynamic Range	57 dB	125 dB
Image FPN	1 %	<0.25 %
Pixel size [um^2]	18.5 x 18.5	30 x 30
Fill factor	22%	15%
Pixel complexity	44 FET, 2 C, 1 PD	77 FET, 2 C, 2 PD
Fixed integration time	YES	NO
Power Consumption	~10mW (240x180)	~100mW (304x240)

Thank you

Dr. Raphael Berner

Christian Brandli

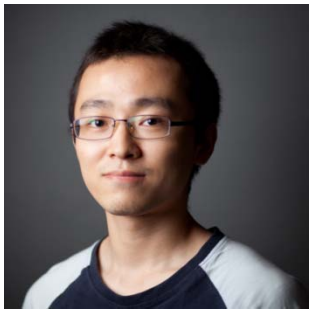

Minhao Yang

Dr. habil. Shih-Chii Liu

Prof. Tobi Delbruck

sensors.ini.uzh.ch

Funding Organizations

University of Zurich

ETH Zurich

EU 7th framework program (SeeBetter)

Swiss National Science Foundation (NCCR Robotics)

Universität Zürich UZH

ETH Eidgenössische Technische Hochschule Zürich Swiss Federal Institute of Technology Zurich

SeeBetter

robotics Swiss National Centre of Competence in Research

SBRET10 pixel layout

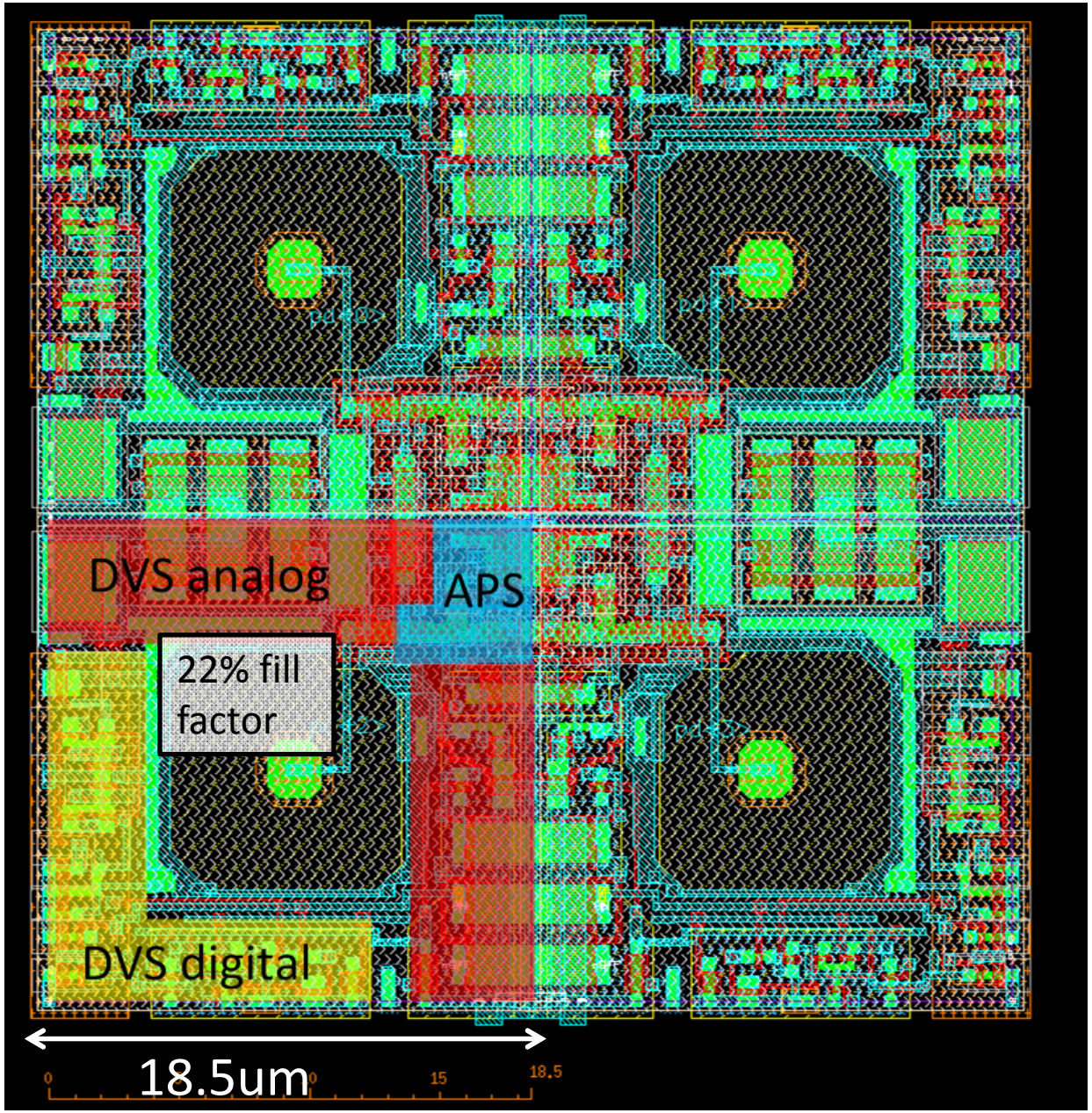

Design	Technology	UMC 180 6M 1P
	Chip size	5x5mm
	APS-DVS array size	240x180
	Pixel size	18.5 x18.5 um^2
	Supply voltage(s)	3.3V/1.8V
	Pixel architecture	apsDVS, 44T+2C.
	Fill factor	22%

Measured	Power consumption	7.4mW low activity 13.5mW high activity
	DVS event threshold limit	12% contrast
	DVS illumination operating range	120dB (down to 0.1lux)
	DVS latency	12us
	APS readout frame rate	40 FPS
	APS FPN (midlevel)	1% of full signal swing
	Readout Noise	<2mV
	Output Voltage Range	1.1V
	APS Dynamic Range	~55dB

Simplified Dynamic Vision Sensor (**DVS**) pixel architecture

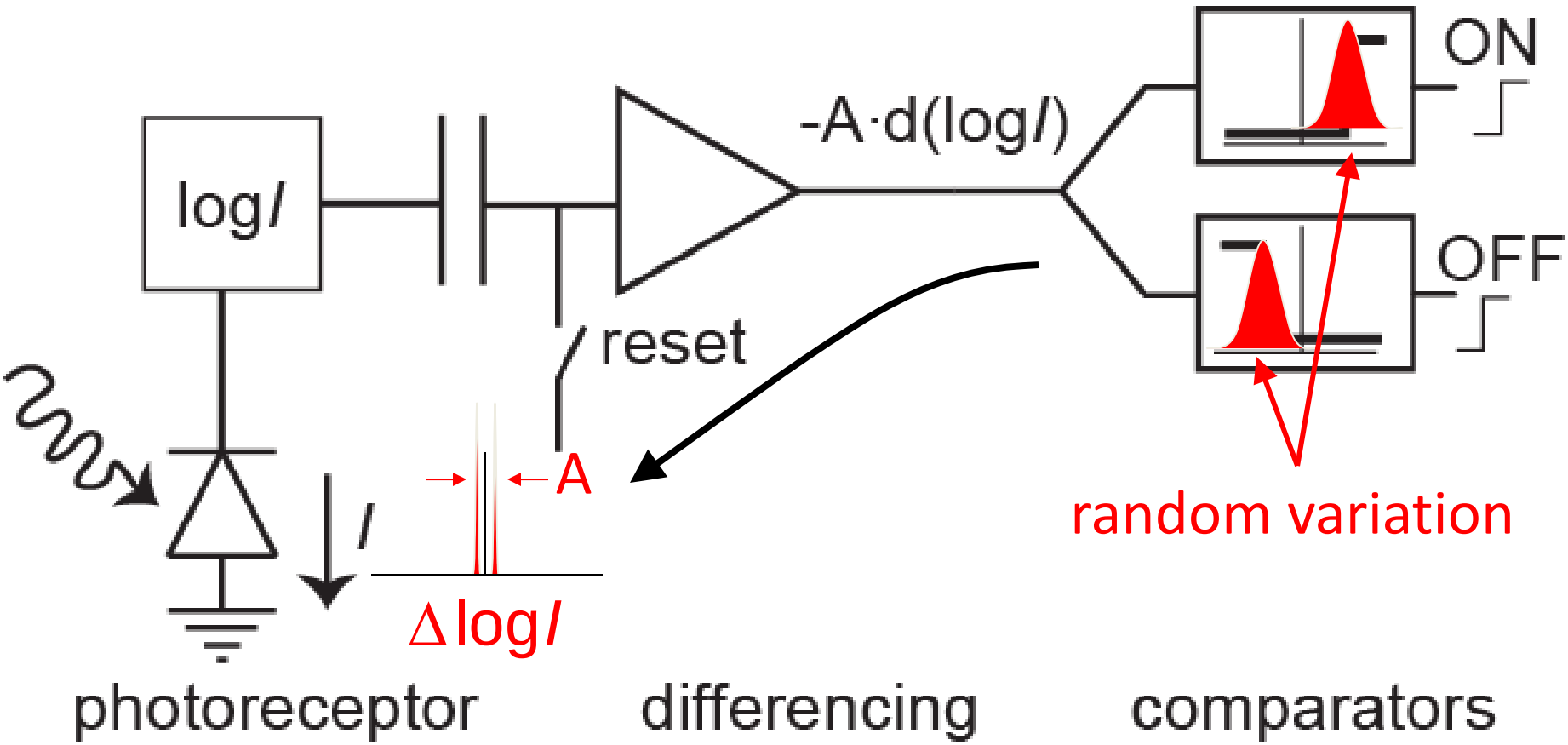

Lichtsteiner et al. JSSC 2009

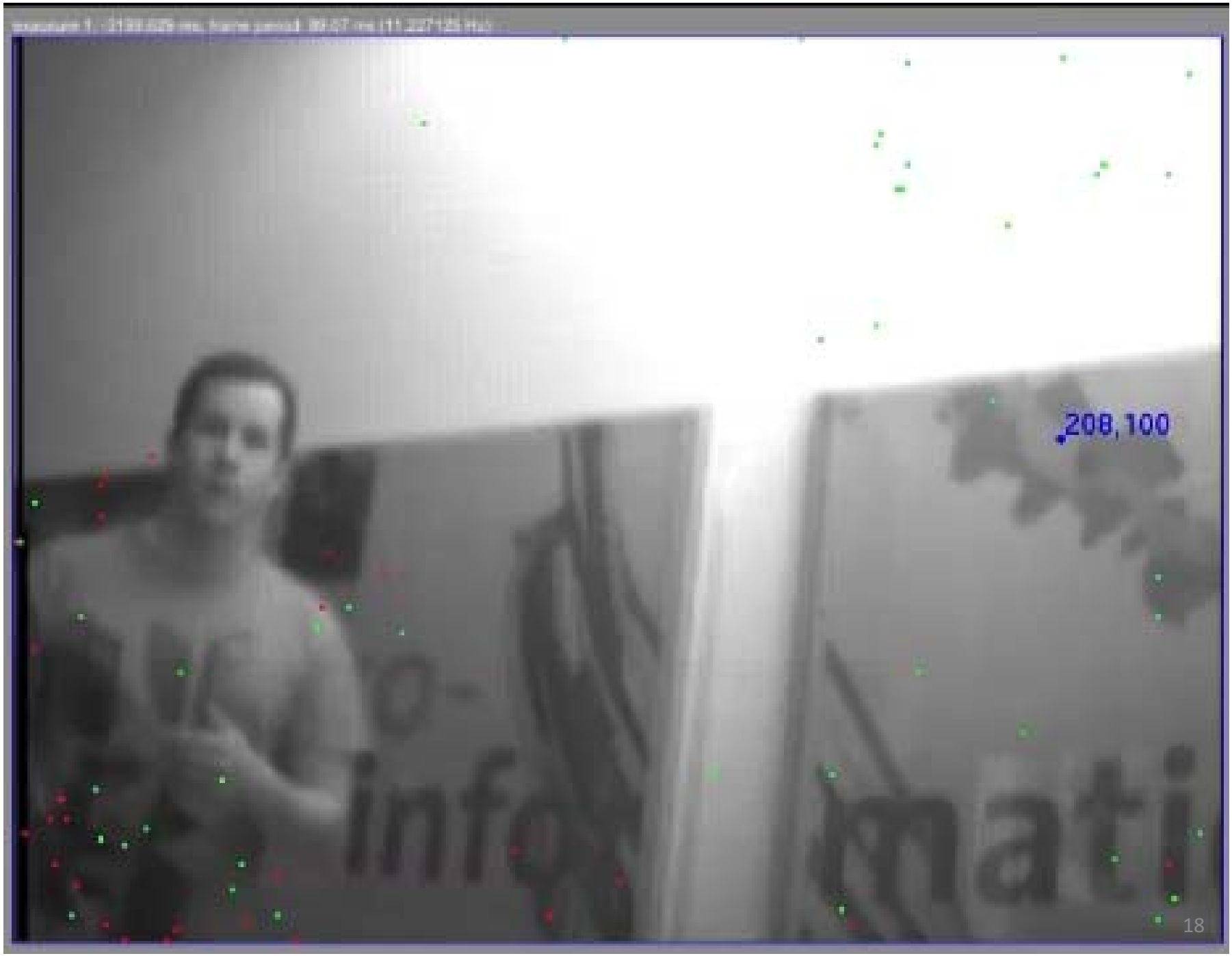
208,100