Highlight Scene FPN on Shared Pixels and a Reduction Technique

Takashi Watanabe, Katsuji Kimura, Masamitsu Taki, Kohji Horikawa, Mitsuru Homma,
Shoko Daikoku, Tetsuya Fujimoto, and Kiyotoshi Misawa
Imaging and Sensing Module Division, LSI Group, Sharp Corporation, Japan
Phone: +81-743-65-0860, Fax: +81-743-65-4847, E-mail:watanabe.takashi@sharp.co.jp

Abstract

Shared pixel technology is most common in recent small pixel CMOS image sensors. In the case of vertically shared pixels, it has been observed horizontal line FPN with the period of shared pixels when highlight scene is imaged and integration period is reduced to very short time by electronic shuttering. We present here the reason of the phenomena and the technique for reducing it. As the results, the FPN reduced to below background level.

Ⅰ. Introduction

Pixel sharing becomes most common technology as pixel size of CMOS image sensors is highly scaled down [1]. Recently, 4-pixel sharing such as 4x1 [2,3,4] and 2x2 [5,6,7] are widely used. In particularly 4x1 sharing, it has been observed horizontal line FPN with the period of shared pixels when highlight scene is imaged and integration period is reduced to very short time by electronic shuttering. Figure 1 shows an example of captured image.

We have analyzed the phenomena and attributed it to overflow mechanism from other pixels within shared pixels. To suppress this overflow mechanism, we introduced additional shutter operations before original shutter and after readout. Experimental results based on the suppressing method show that the overflow model is proved and the horizontal line FPN is clearly removed.

Ⅱ. Analysis

In 4x1 pixel sharing, pixel circuit is shown in Figure 2 and readout timing is shown in Figure 3. We consider the case that highlight scene is imaged and integration period is reduced to very short time around one horizontal line period (1H) by electronic shuttering. When first line of shared pixels is readout, only first readout photodiode (PD-1) is below saturation and others (PD-2,PD-3 and PD-4) are over saturation. Therefore, overflow current from three photodiodes are continuously injected to detection node (FD). In Figure 3, the overflow current accumulated in CDS period (Tcds) causes additional signal (Vfpn) on CDS output, which is the difference between reset output at Tr and signal output at Ts.

Next, when second line of shared pixels is readout, first and second readout photodiodes (PD-1 and PD-2) are below saturation and others (PD-3 and PD-4) are over saturation, because PD-1 is just after the readout. Therefore, additional signal (Vfpn) of second line is smaller than that of first line. In the same way, additional signals of third and forth lines are smaller than that of first and second lines. As the results, horizontal line FPN with the period of shared pixels will appear. Figure 4 shows those phenomena schematically, where (A) is the case that shutter period is 1H and (B) is the case that the shutter period is 2H. When incident light is strong enough to saturate the photodiode below 3H period, overflow occurs soon after readout, which is shown as Δ2 in Figure 4. Figure 5 is a measured signal output along horizontal line numbers. Pixel size in this

case is 2.2um square. FPN indicated in Figure 4 is clearly observed.

The FPN value is proportional to light intensity Vs, time ratio Tcds/Th and shutter period, where Vs is the signal at 1H integration period and Th is a horizontal line period. At 1H-shutter operation, Vfpn=2(Tcds/Th)(Vs)=2Δ1. At 2H-shutter operation, Vfpn=(Tcds/Th)(Vs)=Δ1. To reduce the FPN, it is effective to reduce the CDS period (Tcds). But reduction of CDS period brings increase of readout band width, which causes increase of readout noise [8]. A certain CDS period should be maintained.

Ⅲ. FPN reduction method

To suppress this overflow mechanism, we introduced additional shutter operations before original shutter and after readout. Figure 6 shows timing diagram of the operation and expected effect. Before normal shutter operations (S), additional shutter operations (S') are added in all related lines. As the same manner, after normal readout operations (R), additional shutter operations (S') are added in all related lines. By introducing additional shutter operations, signal charges in photodiodes before shutter and after readout operations are removed and overflow is ceased. As the results, the FPN disappears.

Ⅳ. Results and discussions

Figure 7 shows captured image and Figure 8 shows measured signal pattern when the reduction method is applied. The FPN clearly disappears from captured image and signal waveforms. This also proves the overflow model.

The improvement method shown in Figure 6 is easily realized in progressive readout mode, but in interlace or random access readout modes, it needs special care for constructing readout logic.

In 2x2 pixel sharing architecture, similar overflow effect may occur (See Figure 9). As FPN is 2x2 mode, it may cause coloring effect in Bayer color filter array. The correcting method shown above is also applicable to this case.

Ⅴ. Conclusions

It was found that horizontal line FPN was observed in vertically shared pixels. The FPN was reduced to below background level by introducing additional shutter operation.

References

[1] R.D.McGrath, et al., "Shared pixels for CMOS image sensor arrays", Proceeding of 2005 IEEE Workshop on CCD and AIS, R3,2005.

[2] H.Takahashi et al., "A 3.9um pixel pitch VGA format 10b digital image sensor with 1.5-transistor/pixel", ISSCC Dig. Tech. Papers, 6.1, 2004.

[3] S.Yoshihara, et al., "A 1/1.8-inch 6.4 M pixel 60 frame/s CMOS image sensor with seamless mode change", ISSCC Dig. Tech. Papers, 27.1, 2006

[4] J.Kim, et al., "1/2.5" 8 mega-pixel CMOS image sensor with enhanced image quality for DSC application", IEDM Proc., S5P3, 2006

[5] M.Mori, et al., "A 1/4in 2M pixel CMOS image sensor with 1.75 transistor/pixel", ISSCC Dig. Tech. Papers, 6.2, 2004.

[6] M.Cohen, et al., "Fully optimized Cu based process with dedicated cavity etch for 1.75um and 1.45um pixel pitch CMOS image sensors", IEDM Proc., S5P3, 2006

[7] K-B.Cho, et al., "A 1/2.5 inch 8.1M pixel CMOS image sensor for digital cameras", ISSCC Dig. Tech. Papers, 28.5, 2007

[8] L.J.Kozlowski, et al., "Performance limits in visible and infrared image sensors", IEDM Proc., S36P1, 1999

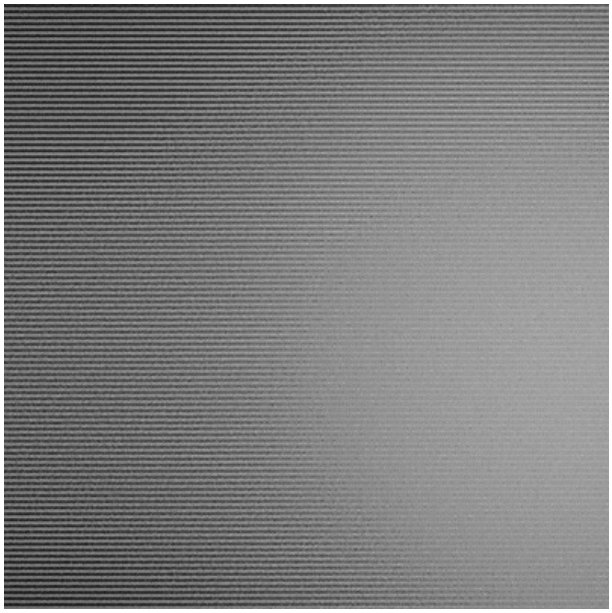

Figure 1. FPN image at high light scene

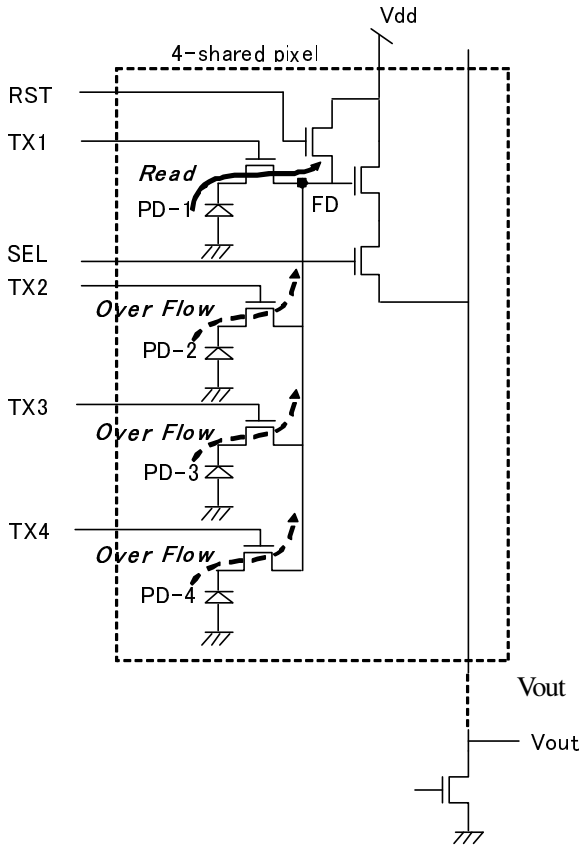

Figure 2. Pixel layout for 4x1 pixel sharing

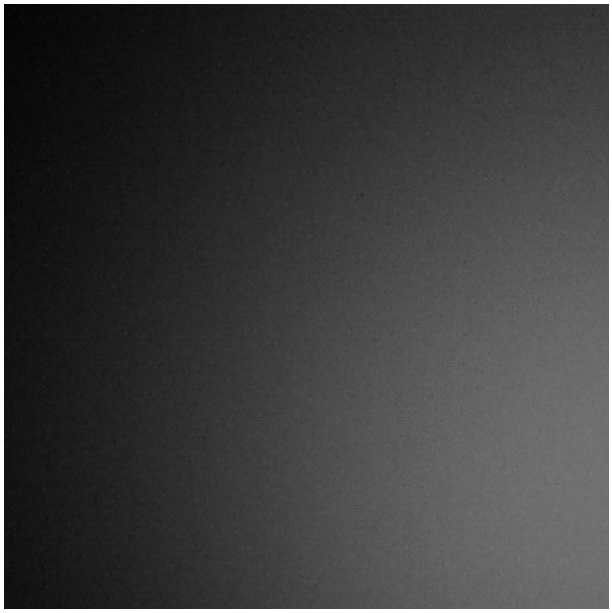

Figure 7. Image with FPN reduction operation

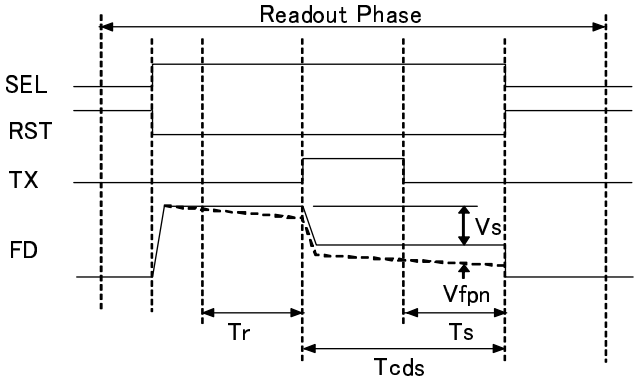

Figure 3. Timing diagram at readout phase

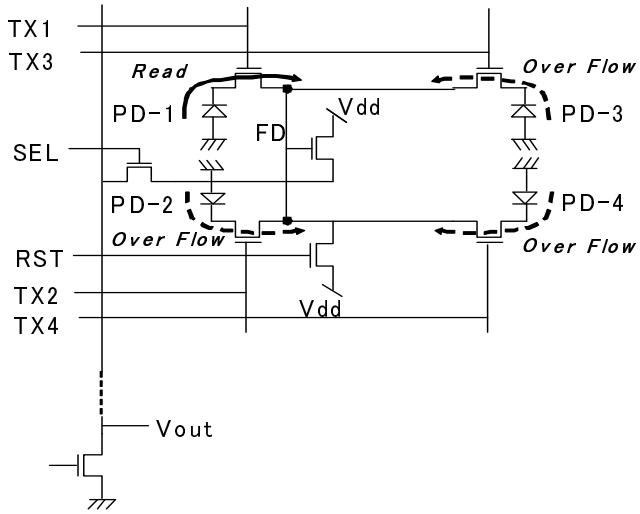

Figure 9. Pixel layout for 2x2 pixel sharing

(A) 1H-Shutter — Overflow Line

		Read Timing				
		0H	1H	2H	3H	4H
Position	Line 1	S	R			
	Line 2		S	R		
	Line 3			S	R	
	Line 4				S	R
Overflow			2Δ1	Δ1	0	0～Δ2

(B) 2H-Shutter

		Read Timing					
		0H	1H	2H	3H	4H	5H
Position	Line 1	S		R			
	Line 2		S		R		
	Line 3			S		R	
	Line 4				S		R
Overflow				Δ1	0	0	0～Δ2

Figure 4. FPN caused by overflow current. (A):1H-shutter, (B):2H-shutter.

(A) 1H-Shutter — S': Additional Shutter Line

		Read Timing				
		0H	1H	2H	3H	4H
Position	Line 1	S	R	S'	S'	S'
	Line 2	S'	S	R	S'	S'
	Line 3	S'	S'	S	R	S'
	Line 4	S'	S'	S'	S	R
Overflow			0	0	0	0

(B) 2H-Shutter

		Read Timing					
		0H	1H	2H	3H	4H	5H
Position	Line 1	S		R	S'	S'	S'
	Line 2	S'	S		R	S'	S'
	Line 3	S'	S'	S		R	S'
	Line 4	S'	S'	S'	S		R
Overflow				0	0	0	0

Figure 6. FPN reduction timing. (A):1H-shutter, (B):2H-shutter.

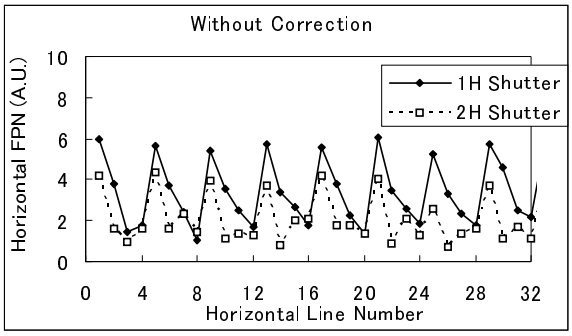

Figure 5. Waveform without FPN reduction

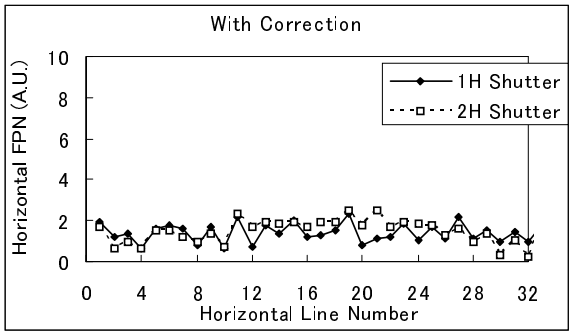

Figure 8. Waveform with FPN reduction